Work Order ID 68270

Monday, April 11, 2011 11:12:17 AM

Item ID: D4151-041 **Accept** **Setup Start**

Revision ID: **Stop**

Item Name: Basket Fwd Hardpoint Assembly, Lower

Start Date: 4/11/2011 **Start Qty:** 2.00 **Cust Item ID:**

Required Date: 4/15/2011 **Req'd Qty:** 2.00 **Customer:**

Reference:

Approvals: **Process Plan:** M **Date:** 11-04-4 **Tooling:** _____ **Date:** _____ **Run Start**

QC: _____ **Date:** _____ **SPC (Y/N):** _____ **Date:** _____ **Stop**

Sequence ID/ Work Center ID	Operation Description	Set Up/ Run Hours	Tool ID	Tool #	Plan Code	Accept Qty	Reject Qty	Reject Number	Insp. Stamp
Draw Nbr / **Revision Nbr**									
D4151 / C									
100		0.00							
Small Fab	**Memo**	0.00				(2)			
Small Fab	1- Assemble as per dwg		SB 11/04/13						
110	QC5- Inspect part completeness to step on W/O	0.00							
QC	**Memo**	0.00				M	11	04	13 (2)
Quality Control									
120	Identify as per dwg & Stock Location: 134	0.00							
Packaging	**Memo**	0.00				11/4/13			(22)
Packaging									

Dart Aerospace Ltd

W/O:		WORK ORDER CHANGES					
DATE	STEP	PROCEDURE CHANGE	By	Date	Qty	Approval Chief Eng / Prod Mgr	Approval QC Inspector

Part No: _____ **PAR #:** _____ **Fault Category:** _____ **NCR:** Yes No **DQA:** _____ **Date:** _____

Resolution: _____ **Disposition:** _____ **QA: N/C Closed:** _____ **Date:** _____

NCR:		WORK ORDER NON-CONFORMANCE (NCR)						
DATE	STEP	Description of NC Section A	Corrective Action Section B			Verification Section C	Approval Chief Eng	Approval QC Inspector
			Initial Chief Eng	Action Description Chief Eng	Sign & Date			

NOTE: Date & initial all entries

H:\fFORMS\Quality Assurance\approved QA\NCRWO RevE

Work Order ID 68270

Monday, April 11, 2011 11:12:17 AM

Item ID: D4151-041 **Accept** **Setup Start**

Revision ID: **Stop**

Item Name: Basket Fwd Hardpoint Assembly, Lower

Start Date: 4/11/2011 **Start Qty:** 2.00 **Cust Item ID:**

Required Date: 4/15/2011 **Req'd Qty:** 2.00 **Customer:**

Reference:

Approvals: **Process Plan:** _____ **Date:** _____ **Tooling:** _____ **Date:** _____ **Run Start**

QC: _____ **Date:** _____ **SPC (Y/N):** _____ **Date:** _____ **Stop**

Sequence ID/ Work Center ID	Operation Description	Set Up/ Run Hours	Tool ID	Tool #	Plan Code	Accept Qty	Reject Qty	Reject Number	Insp. Stamp
130	QC21- Final Inspection - Work Order Release	0.00					11/4/13		
QC Quality Control	**Memo**	0.00							

WF
11-04-13

Dart Aerospace Ltd

W/O:		WORK ORDER CHANGES					
DATE	STEP	PROCEDURE CHANGE	By	Date	Qty	Approval Chief Eng / Prod Mgr	Approval QC Inspector

Part No: _____ **PAR #:** _____ **Fault Category:** _____ **NCR:** Yes No **DQA:** _____ **Date:** _____

Resolution: _____ **Disposition:** _____ **QA: N/C Closed:** _____ **Date:** _____

NCR:		WORK ORDER NON-CONFORMANCE (NCR)						
DATE	STEP	Description of NC Section A	Corrective Action Section B			Verification Section C	Approval Chief Eng	Approval QC Inspector
			Initial Chief Eng	Action Description Chief Eng	Sign & Date			

NOTE: Date & initial all entries

H:\fFORMS\Quality Assurance\approved QA\NCRWO RevE

Picklist Print

Monday, April 11, 2011 11:12:24 AM

Work Order ID: 68270

Parent Item: D4151-041

Parent Item Name: Basket Fwd Hardpoint Assembly, Lower

Start Date: 4/11/2011 **Required Date:** 4/15/2011

Start Qty: 2.00 **Required Qty:** 2.00

Comments: IPP Rev:A 10.06.24 new issue DD verf:EC□
IPP Rev:B 10.07.22 as per revB DD verf:JLM IPP Rev:C
11.01.21 as per dwg revC DD verf:JLM

Component Item ID/ Item Name	Replacement Item ID	Mfg/ Purch	Bin Item	Primary Location	Last Location	Route Seq ID	Unit of Measure	Qty on Hand	Qty per Kit	Total Qty	Qty Issued	Date Issued	Status
D4151-1		Manufactured	No			100	Each	1.0000	2	4	SB	11/04/13	2
Lower Hardpoint Plate													
				Location			**Loc Qty**		**Loc Code**				
				ST134			1	B68271		3			
					65758		1			1			
D4151-5		Manufactured	No			100	Each	2.0000	1	2	SB	11/04/13	2
Fwd Basket Instl Stud													
				Location			**Loc Qty**		**Loc Code**				
				GA			2						
					67713		2			2			
AN4C13A		Purchased	No			100	Each	72.0000	2	4	SB	11/04/13	2
BOLT													
				Location			**Loc Qty**		**Loc Code**				
				ST353			60						
					117366		60			4			
				ST357			12						
					114492		4						
					116914		8						

Dart Aerospace Ltd

W/O:		WORK ORDER CHANGES					
DATE	STEP	PROCEDURE CHANGE	By	Date	Qty	Approval Chief Eng / Prod Mgr	Approval QC Inspector

Part No: _____ **PAR #:** _____ **Fault Category:** _____ **NCR:** Yes No **DQA:** _____ **Date:** _____

Resolution: _____ **Disposition:** _____ **QA: N/C Closed:** _____ **Date:** _____

NCR:		WORK ORDER NON-CONFORMANCE (NCR)						
DATE	STEP	Description of NC Section A	Corrective Action Section B			Verification Section C	Approval Chief Eng	Approval QC Inspector
			Initial Chief Eng	Action Description Chief Eng	Sign & Date			

NOTE: Date & initial all entries

H:\fFORMS\Quality Assurance\approved QA\NCRWO RevE

Picklist Print

Monday, April 11, 2011 11:12:24 AM

Work Order ID: 68270

Parent Item: D4151-041

Parent Item Name: Basket Fwd Hardpoint Assembly, Lower

Start Date: 4/11/2011 **Required Date:** 4/15/2011

Start Qty: 2.00 **Required Qty:** 2.00

MS21043-4	Purchased	No	100	Each	661.0000	2	4	SB 11/04/13 (2)

Nut

Location	Loc Qty	Loc Code	
FG	40		
104603	40		
ST301	621		
114523	3		
116188	318		4
116549	300		

NAS1149C0432R	Purchased	No	100	Each	6,590.000	4	8	SB 11/04/13 (2)

Washer

Location	Loc Qty	Loc Code	
ST297	6590		
116900	1590		8
117291	5000		

Dart Aerospace Ltd

W/O:		WORK ORDER CHANGES					
DATE	STEP	PROCEDURE CHANGE	By	Date	Qty	Approval Chief Eng / Prod Mgr	Approval QC Inspector

Part No: _____ **PAR #:** _____ **Fault Category:** _____ **NCR:** Yes No **DQA:** _____ **Date:** _____

Resolution: _____ **Disposition:** _____ **QA: N/C Closed:** _____ **Date:** _____

NCR:		WORK ORDER NON-CONFORMANCE (NCR)						
DATE	STEP	Description of NC Section A	Corrective Action Section B			Verification Section C	Approval Chief Eng	Approval QC Inspector
			Initial Chief Eng	Action Description Chief Eng	Sign & Date			

NOTE: Date & initial all entries

H:\fFORMS\Quality Assurance\approved QA\NCRWO RevE

ITEM	QTY -041	QTY -043	P/N	DESCRIPTION
	X		D4151-041	BASKET FWD HARDPOINT ASSY (LOWER)
		X	D4151-043	BASKET FWD HARDPOINT ASSY (UPPER)
1	2		D4151-1	LOWER HARDPOINT PLATE
2		2	D4151-3	UPPER HARDPOINT PLATE
3	1		D4151-5	FWD BASKET INSTL STUD (LOWER)
4		1	D4151-7	FWD EYEBOLT RECEIVER (UPPER)
5	2	2	AN4C13A	BOLT
6	2	2	MS21043-4	NUT
7	4	4	NAS1149C0432R	WASHER

C

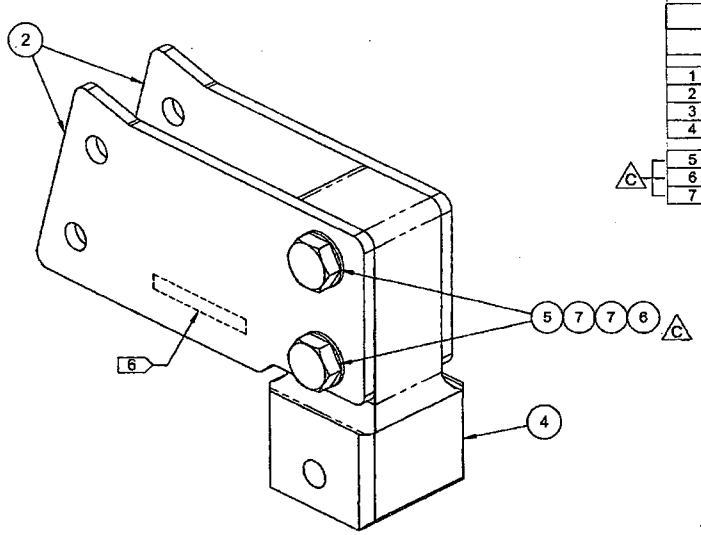

D4151-043 BASKET FWD HARDPOINT ASSY (UPPER)

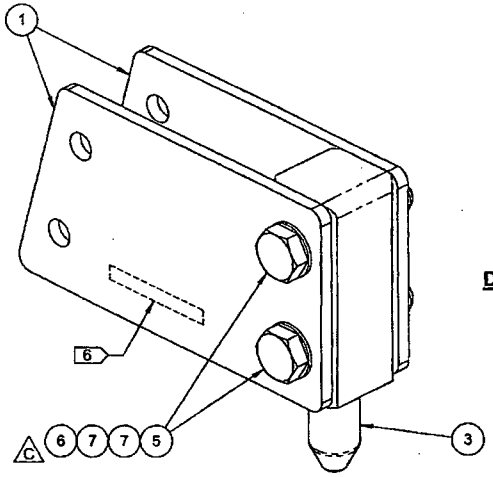

D4151-041 BASKET FWD HARDPOINT ASSY (LOWER)

SHOP COPY
RETURN TO
ENGINEERING
UNCONTROLLED COPY
SUBJECT TO AMENDMENT
WITHOUT NOTICE
WORK ORDER
NO. 68270

RELEASED
2011 -01- 18

PR11-004-11

REV.	DESCRIPTION	BY	DATE
C	AN4 HARDWARE WAS AN3 (B6-1, C3-1 & D3-1); Ø0.252 WAS Ø0.191 (C5-2, D1-2); TIGHTENED TOL ON 1.000 DIM (C5-2, D1-2, C7-3, C3-3); Ø0.250 WAS Ø0.191 (C6-3, B4-3); 1.83 WAS 1.75 (C1-2), 2.84 WAS 2.76 (B3-3) AND 1.88 WAS 1.80 (C1-3) TO PRESERVE 1.5ED. REASON: SEE D407-797 DESIGN JOURNAL.	MB	10.12.14
B	ADDED D4151-5/-7 (SHT 3); D4151-5 WAS D3911-1 (ZN B6-1 & D3-1); D4151-7 WAS D3911-3 (ZN C4-1 & D3-1) ITEMS #5, 6 & 7 REPLACE MS20615-4M20 (ZN C3-1, D3-1 & B8-1); Ø0.191 2 PL REPLACES Ø0.129 3 PL (ZN C5-2); Ø0.191 2 PL REPLACES Ø0.129 4 PL (ZN D1-2). REASON: SEE TR-D350-607-2 REV. B.	MB	10.07.05
A	NEW ISSUE	MB	10.08.22

DESIGN		DART AEROSPACE LTD HAWKESBURY, ONTARIO, CANADA	
DRAWN			
CHECKED	SC	DRAWING NO. D4151	REV. C SHEET 1 OF 3
MFG. APPR.			
APPROVED		TITLE BASKET FWD HARDPOINT	SCALE NTS
DE APPR.			
DATE	10.12.14		

COPYRIGHT © 2010 BY DART AEROSPACE LTD
THIS DOCUMENT IS PRIVATE AND CONFIDENTIAL AND IS SUPPLIED ON THE EXPRESS CONDITION THAT IT IS NOT TO BE USED FOR ANY PURPOSE OR COPIED OR COMMUNICATED TO ANY OTHER PERSON WITHOUT WRITTEN PERMISSION FROM DART AEROSPACE LTD.

NOTES:
1) MATERIAL: N/A
2) FINISH: NONE
3) TOLERANCES: PER DART QSI 018 UNLESS OTHERWISE NOTED
4) UNITS: INCHES UNLESS OTHERWISE NOTED
5) BREAK SHARP EDGES: 0.005 TO 0.010 MAX
6) IDENTIFICATION: IDENTIFY WITH DART P/N "D4151-04X" USING FINE POINT PERMANENT INK MARKER
7) WEIGHT:
- D4151-041 = 0.88 lbs
- D4151-043 = 1.17 lbs

Dart Aerospace Ltd

W/O:		WORK ORDER CHANGES					
DATE	STEP	PROCEDURE CHANGE	By	Date	Qty	Approval Chief Eng / Prod Mgr	Approval QC Inspector

Part No: _____ **PAR #:** _____ **Fault Category:** _____ **NCR:** Yes No **DQA:** _____ **Date:** _____

Resolution: _____ **Disposition:** _____ **QA: N/C Closed:** _____ **Date:** _____

NCR:		WORK ORDER NON-CONFORMANCE (NCR)						
DATE	STEP	Description of NC Section A	Corrective Action Section B			Verification Section C	Approval Chief Eng	Approval QC Inspector
			Initial Chief Eng	Action Description Chief Eng	Sign & Date			

NOTE: Date & initial all entries

H:\fFORMS\Quality Assurance\approved QA\NCRWO RevE

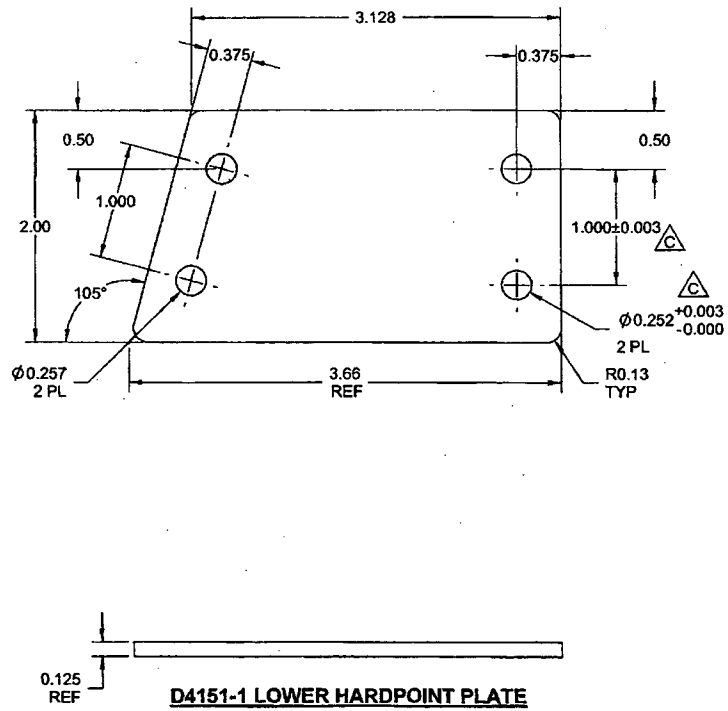

D4151-1 LOWER HARDPOINT PLATE

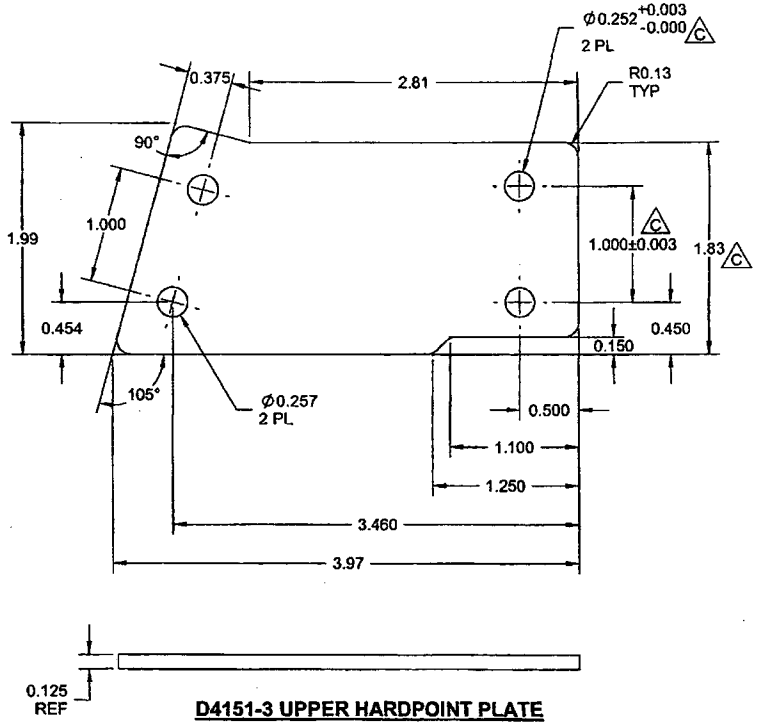

D4151-3 UPPER HARDPOINT PLATE

RELEASED
2011 -01- 18

w/o 68270

NOTES:
1) MATERIAL: 303/304/316 STAINLESS STEEL SHEET ANNEALED 2B, 0.125 THK
PER MIL-S-5059 OR AMS 5513/5524 OR ASTM A240 OR ASME SA240
REF. DART SPEC. M304S11GA OR M303S11GA
2) FINISH: NONE
3) TOLERANCES: PER DART QSI 018 UNLESS OTHERWISE NOTED
4) UNITS: INCHES UNLESS OTHERWISE NOTED
5) BREAK SHARP EDGES: 0.005 TO 0.010 MAX
6) IDENTIFICATION: IDENTIFY AT ASSEMBLY
7) WEIGHT:
- D4151-1 = 0.24 lbs
- D4151-3 = 0.23 lbs

DESIGN		DART AEROSPACE LTD HAWKESBURY, ONTARIO, CANADA
DRAWN		
CHECKED	SC	DRAWING NO. D4151 — REV. C — SHEET 2 OF 3
MFG. APPR.		
APPROVED		TITLE: BASKET FWD HARDPOINT — SCALE: NTS
DE APPR.		
DATE	10.12.14	

COPYRIGHT © 2010 BY DART AEROSPACE LTD
THIS DOCUMENT IS PRIVATE AND CONFIDENTIAL AND IS SUPPLIED ON THE EXPRESS CONDITION THAT IT IS NOT TO BE USED FOR ANY PURPOSE OR COPIED OR COMMUNICATED TO ANY OTHER PERSON WITHOUT WRITTEN PERMISSION FROM DART AEROSPACE LTD.

Dart Aerospace Ltd

W/O:		WORK ORDER CHANGES					
DATE	STEP	PROCEDURE CHANGE	By	Date	Qty	Approval Chief Eng / Prod Mgr	Approval QC Inspector

Part No: _____ **PAR #:** _____ **Fault Category:** _____ **NCR:** Yes No **DQA:** _____ **Date:** _____

Resolution: _____ **Disposition:** _____ **QA: N/C Closed:** _____ **Date:** _____

NCR:		WORK ORDER NON-CONFORMANCE (NCR)						
DATE	STEP	Description of NC Section A	Corrective Action Section B			Verification Section C	Approval Chief Eng	Approval QC Inspector
			Initial Chief Eng	Action Description Chief Eng	Sign & Date			

NOTE: Date & initial all entries

H:\fFORMS\Quality Assurance\approved QA\NCRWO RevE

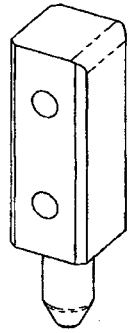

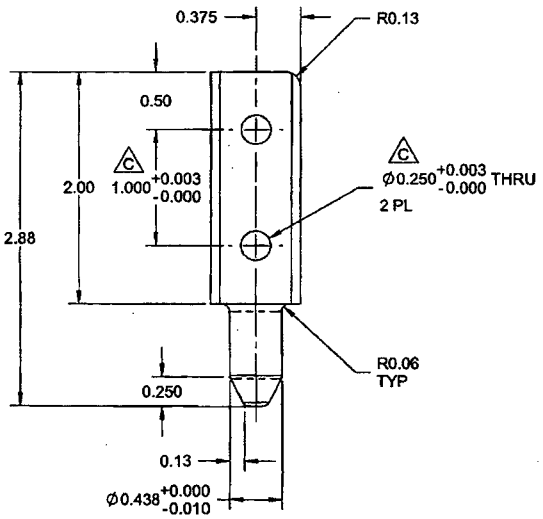

D4151-5 FWD BASKET INSTL STUD (LOWER)

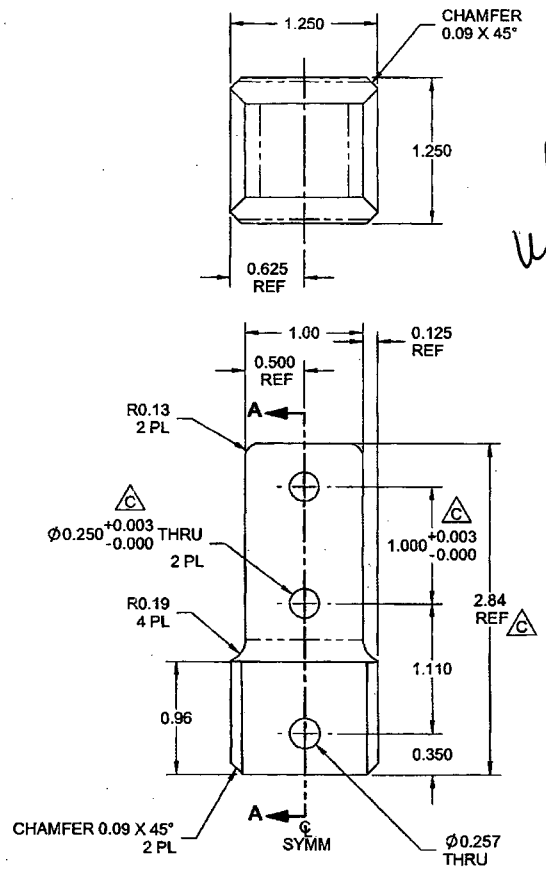

D4151-7 FWD EYEBOLT RECEIVER (UPPER)

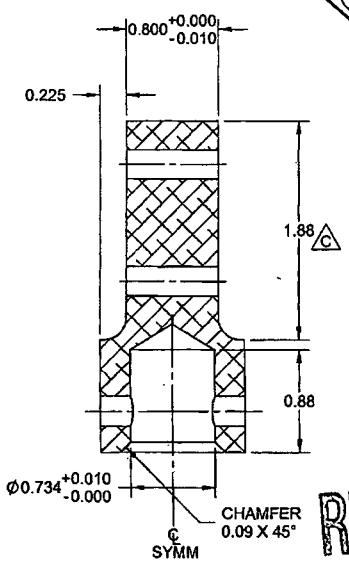

SECTION A-A

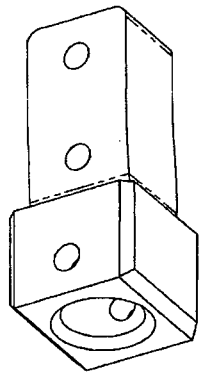

w/o 68270

RELEASED
2011 -
RELEASED

NOTES:
1) MATERIAL -5: 303/304/316 STAINLESS STEEL ROUND BAR, PER ASTM A276 OR ASTM A582 PER DART SPEC M303R OR M304R
-7: 303/304/316 STAINLESS STEEL BAR, PER ASTM A276 OR ASTM A582 PER DART SPEC M303B OR M304B
2) FINISH: NONE
3) TOLERANCES: PER DART QSI 018 UNLESS OTHERWISE NOTED
4) UNITS: INCHES UNLESS OTHERWISE NOTED
5) BREAK SHARP EDGES: 0.005 TO 0.010 MAX
6) IDENTIFICATION: IDENTIFY AT ASSEMBLY
7) WEIGHT -5: 0.36 lbs
-7: 0.70 lbs

DESIGN		DART AEROSPACE LTD HAWKESBURY, ONTARIO, CANADA
DRAWN		
CHECKED	SC	DRAWING NO. D4151 — REV. C — SHEET 3 OF 3
MFG. APPR.		
APPROVED		TITLE: BASKET FWD HARDPOINT — SCALE: NTS
DE APPR.		
DATE	10.12.14	

COPYRIGHT © 2010 BY DART AEROSPACE LTD
THIS DOCUMENT IS PRIVATE AND CONFIDENTIAL AND IS SUPPLIED ON THE EXPRESS CONDITION THAT IT IS NOT TO BE USED FOR ANY PURPOSE OR COPIED OR COMMUNICATED TO ANY OTHER PERSON WITHOUT WRITTEN PERMISSION FROM DART AEROSPACE LTD.

Dart Aerospace Ltd

W/O:		WORK ORDER CHANGES					
DATE	STEP	PROCEDURE CHANGE	By	Date	Qty	Approval Chief Eng / Prod Mgr	Approval QC Inspector

Part No: _____ **PAR #:** _____ **Fault Category:** _____ **NCR:** Yes No **DQA:** _____ **Date:** _____

Resolution: _____ **Disposition:** _____ **QA: N/C Closed:** _____ **Date:** _____

NCR:		WORK ORDER NON-CONFORMANCE (NCR)						
DATE	STEP	Description of NC Section A	Corrective Action Section B			Verification Section C	Approval Chief Eng	Approval QC Inspector
			Initial Chief Eng	Action Description Chief Eng	Sign & Date			

NOTE: Date & initial all entries

H:\fFORMS\Quality Assurance\approved QA\NCRWO RevE